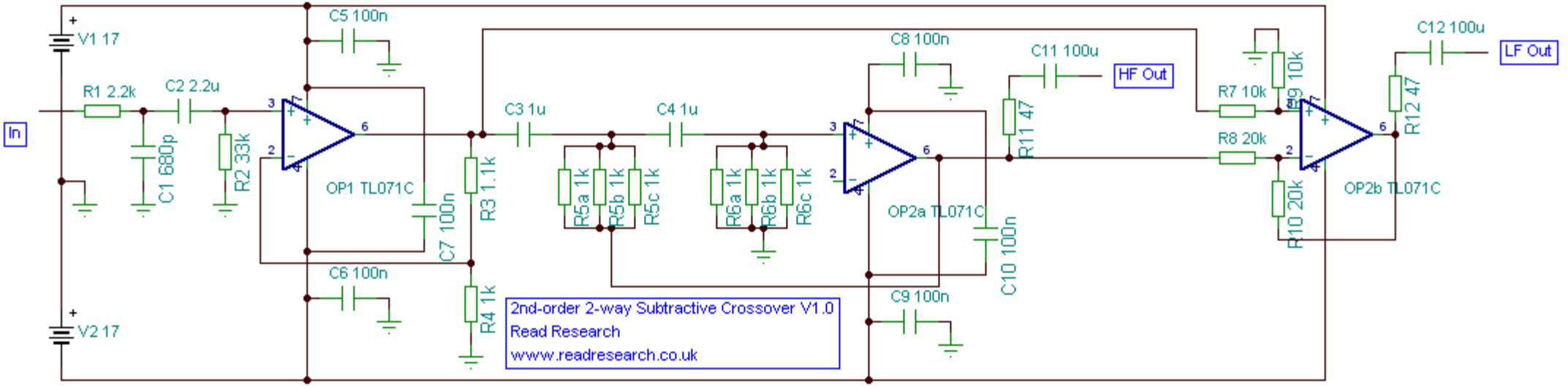
V1 17
V2 17
In
R1 2.2k
C2 2.2u
C1 680p
R2 33k
C5 100n
C6 100n
OP1 TL071C
C7 100n
R3 1.1k
R4 1k
C3 1u
C4 1u
R5a 1k
R5b 1k
R5c 1k
R6a 1k
R6b 1k
R6c 1k
C8 100n
C9 100n
OP2a TL071C
C10 100n
C11 100u
HF Out
R11 47
R7 10k
R8 20k
R9 10k
R10 20k
OP2b TL071C
R12 47
C12 100u
LF Out
2nd-order 2-way Subtractive Crossover V1.0
Read Research
www.readresearch.co.uk